GH-YT-106-B

Yatta Goal Getter Hamper

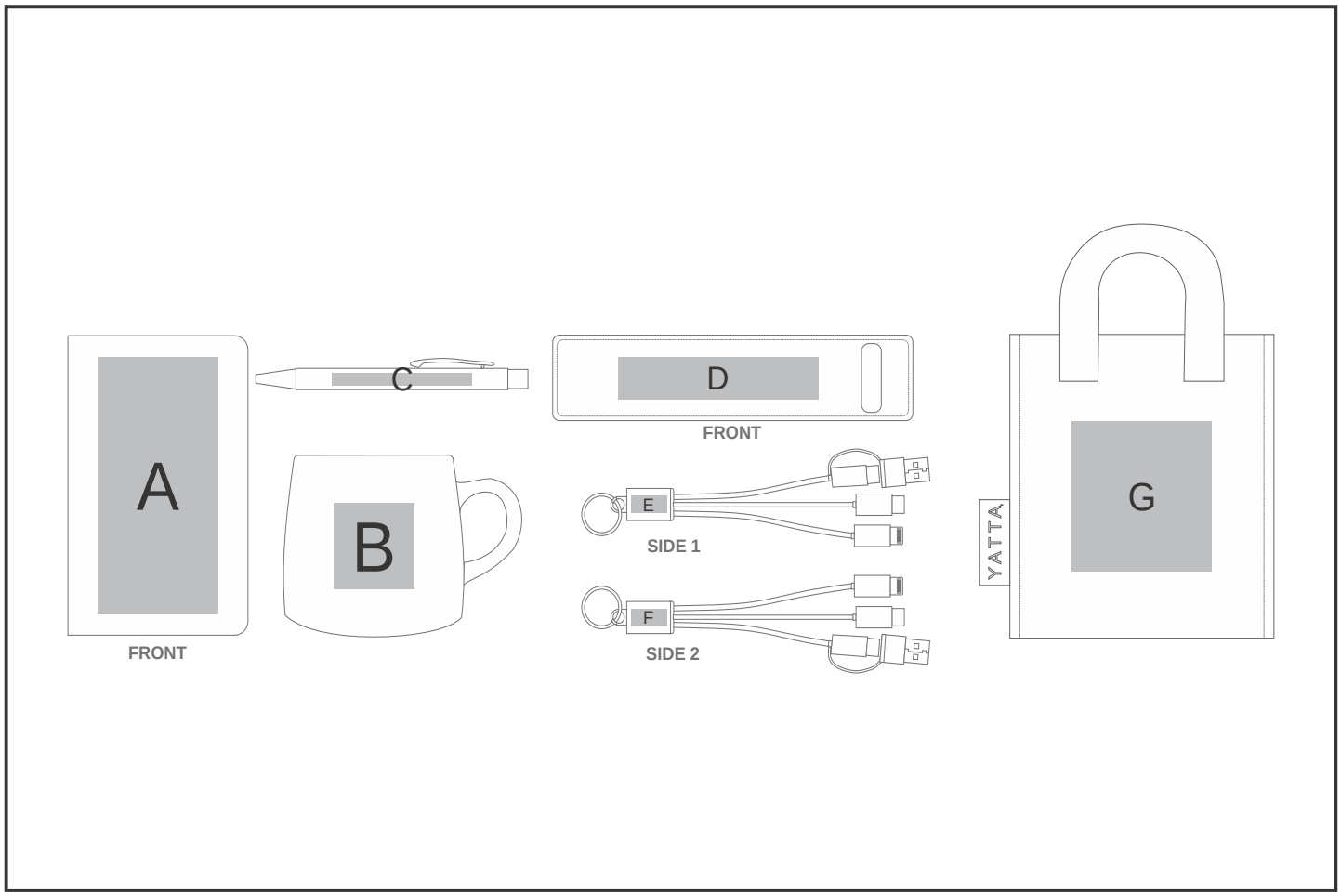

Need to know:

- Includes 1-Position Laser Engraving on Mug, Cable & Pen AND 1-Colour, 1-Position Screen Print on Notebook & Bag (setup fees apply)
- **Laser Colour:** POS B - White on Black Mugs and Cream on White Mugs. | Pen - Light Grey | Cable - White
- No Artwork with Solid Coverage will be branded for Laser on the Mug.
- **Screen:** Texture of the item will affect the print
- We can only brand **"WHITE"** or **"BLACK"** on the bag

Branding Options:

Position	Branding Method (Branding Code)	No. of Colours	Dimension
A	Screen Print (SA)	2 Colours	60mm wide x 120mm high
A	Digital Direct Transfer (DDT-A)	Full Colour	70mm wide x 120mm high
B	Laser Engraving (LB)	N/A	30mm wide x 40mm high
B	Pad Printing (PC)	4 Colours	40mm wide x 40mm high
C	Laser Engraving (LA)	N/A	70mm wide x 6mm high

D	Screen Print (SC)	1 Colour	100mm wide x 20mm high

E	Laser Engraving (LA)	N/A	15mm wide x 8mm high
E	Pad Printing (PB)	4 Colours	18mm wide x 8mm high

F	Laser Engraving (LA)	N/A	15mm wide x 8mm high
F	Pad Printing (PB)	4 Colours	18mm wide x 8mm high

G	Screen Print (SA)	1 Colour	70mm wide x 70mm high